ARMSTRONG®

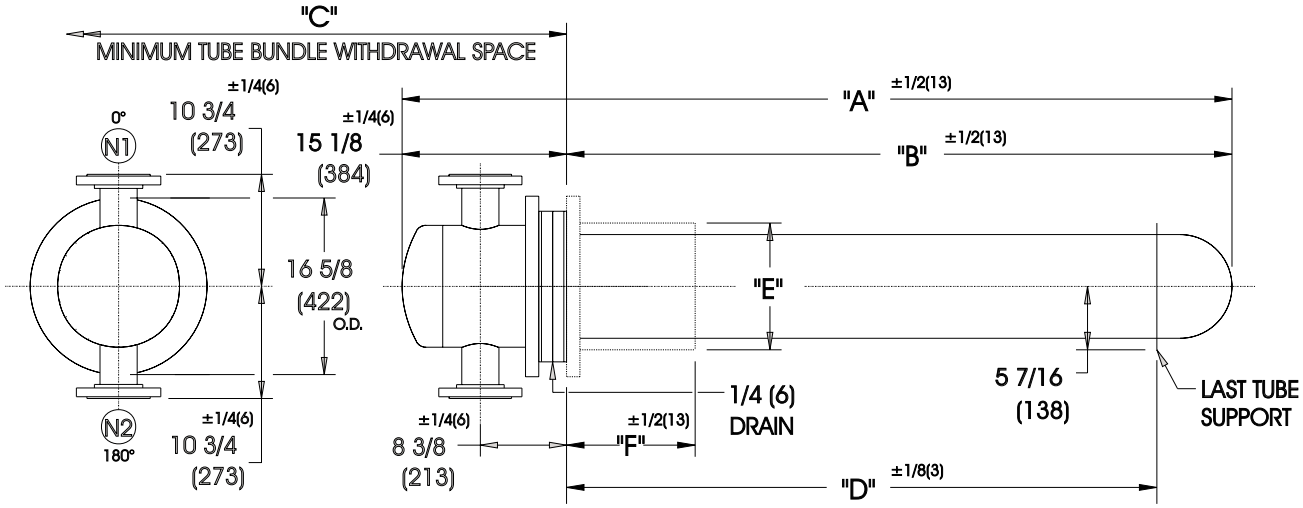

DIMENSIONS SHOWN AS: inches (mm)

EXCHANGER SIZE	DIMENSIONS							
	"A"		"B"		"C"		"D"	
	inches	mm	inches	mm	inches	mm	inches	mm
THWX-1236-2-4	50 -7/8	1292	35-3/4	908	38	965	24-5/16	618
THWX-1242-2-4	56 -7/8	1445	41-3/4	1060	44	1118	30-5/16	770
THWX-1248-2-4	62 -7/8	1597	47-3/4	1213	50	1270	36-5/16	922
THWX-1254-2-4	68 -7/8	1749	53-3/4	1365	56	1422	42-5/16	1075
THWX-1260-2-4	74 -7/8	1902	59-3/4	1518	62	1575	48-5/16	1227
THWX-1266-2-4	80 -7/8	2054	65-3/4	1670	68	1727	54-5/16	1380
THWX-1272-2-4	86 -7/8	2207	71-3/4	1822	74	1880	60-5/16	1532
THWX-1278-2-4	92 -7/8	2359	77-3/4	1975	80	2032	66-5/16	1684
THWX-1284-2-4	98 -7/8	2511	83-3/4	2127	86	2184	72-5/16	1837
THWX-1290-2-4	104-7/8	2664	89-3/4	2280	92	2337	78-5/16	1989
THWX-1296-2-4	110-7/8	2816	95-3/4	2432	98	2489	84-5/16	2142
THWX-12102-2-4	116-7/8	2969	101-3/4	2584	104	2642	90-5/16	2294
THWX-12108-2-4	122-7/8	3121	107-3/4	2737	110	2794	96-5/16	2446
THWX-12114-2-4	128-7/8	3273	113-3/4	2889	116	2946	102-5/16	2599
THWX-12120-2-4	134-7/8	3426	119-3/4	3042	122	3099	108-5/16	2751
THWX-12126-2-4	140 -7/8	3578	125-3/4	3194	128	3251	114-5/16	2904
THWX-12132-2-4	146 -7/8	3731	131-3/4	3346	134	3404	120-5/16	3056
THWX-12138-2-4	152 -7/8	3883	137-3/4	3499	140	3556	126-5/16	3208
THWX-12144-2-4	158 -7/8	4035	143-3/4	3651	146	3708	132-5/16	3361
THWX-12150-2-4	164 -7/8	4188	149-3/4	3804	152	3861	138-5/16	3513
THWX-12156-2-4	170 -7/8	4340	155-3/4	3956	158	4013	144-5/16	3666
THWX-12162-2-4	176 -7/8	4493	161-3/4	4108	164	4166	150-5/16	3818

NOZZLE SCHEDULE

N1	INLET	4" FLG	(102)
N2	OUTLET	4" FLG	(102)

COLLAR ASSEMBLY

	STANDARD	OVS. FOR STONE LINING
"E"	12-3/4" (324)	14" (356)
"F"	10" (254)	10-1/2" (267)

DESIGN CONDITIONS

	TUBES	
DESIGN PRESSURE	150 PSIG	1034 KPa
DESIGN TEMPERATURE	375 F	191 C
M.D.M.T.	35 F	1.7 C
HYD. TEST PRESSURE	225 PSIG	1551 KPa

NOTES:
1. COLLAR ASSEMBLY SUPPLIED SEPARATELY.
2. FABRICATED TO ASME CODE SECTION VIII DIVISION 1 AND LATEST ADDENDA.
3. DRAWING IS NOT TO SCALE.
4. ALL DIMN'S 1/8 (3) UNLESS OTHERWISE SHOWN.
5. DIMENSIONS SHOWN AS: In.(mm)

CUSTOMER:
LOCATION:

ENGINEER :
ORDER No.:
PROJECT/JOB:
LOCATION:

TAG:
QUOTE #

TITLE G.A. 150 LB. TANK HEATERS	ARMSTRONG	NUMBER	REV.
DATE : 24/05/95 BY : D.C.R	TORONTO - CANADA TEL : (416) 755-2291 · MONTREAL - CANADA TEL : (514) 421-2424 · BUFFALO - N. Y. TEL: (716) 693-8813 · COLCHESTER - U.K. TEL: (44) 120-657-9491	Thwx-12-2P-4	

© S.A. Armstrong Limited 1999